Repair Parts

ELR-E12E-12ABCP

Touchless ligature resistant faucet

ELR-12KJKABNF ELR Series Control Box, DC, Dual Supply, Mechanical Mixer

Base Parts:

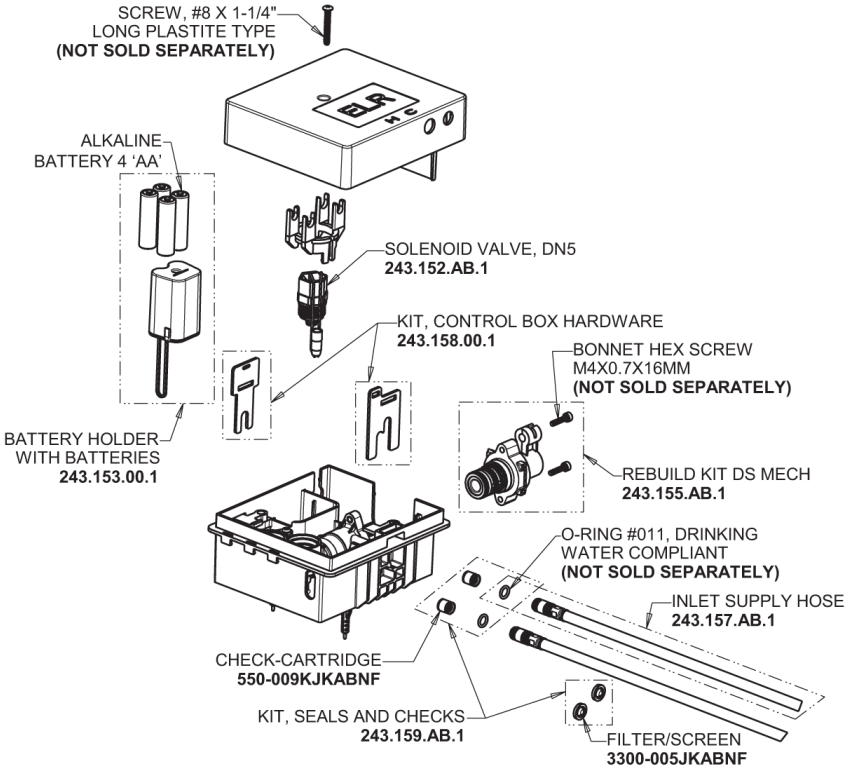

ELR Series Spout Assembly

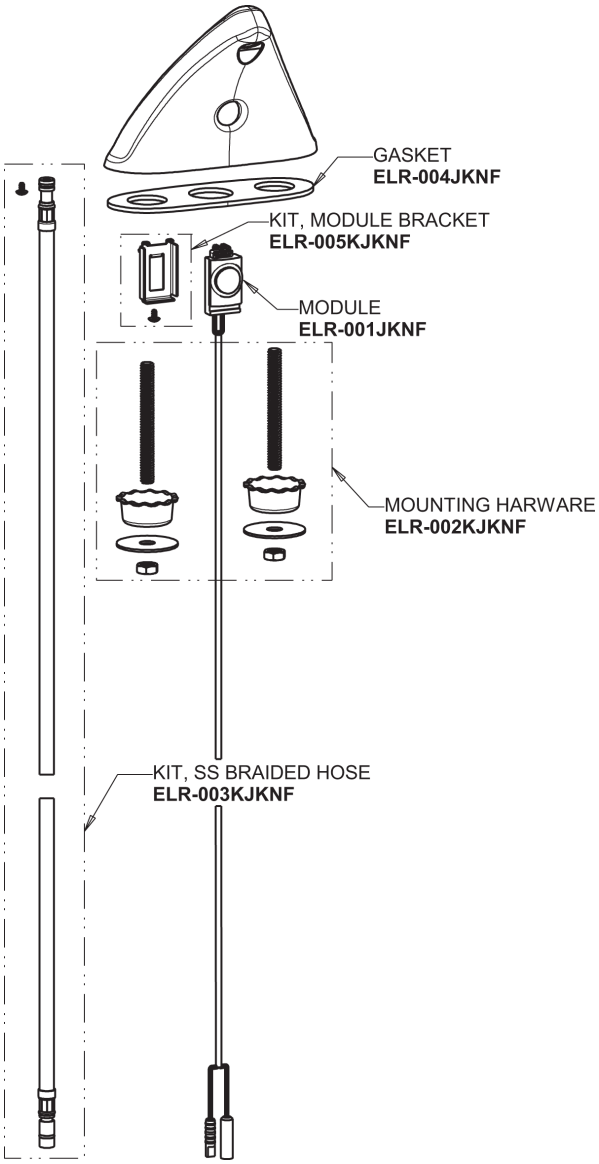

1.0 GPM (3.8 L/min) Pressure Compensating Laminar Flow Outlet

244.170.00.1

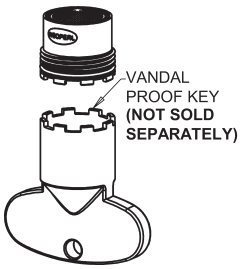

For Technical Assistance:

Phone: 800-TEC-TRUE (832-8783)

Email: techsupport.us@chicagofaucets.com

2100 South Clearwater Drive
Des Plaines, IL 60018
Phone: 847-803-5000
chicagofaucets.com