Repair Parts

116.673.AB.1

Touch-free, programmable faucet with above-deck electronics

Base Parts:

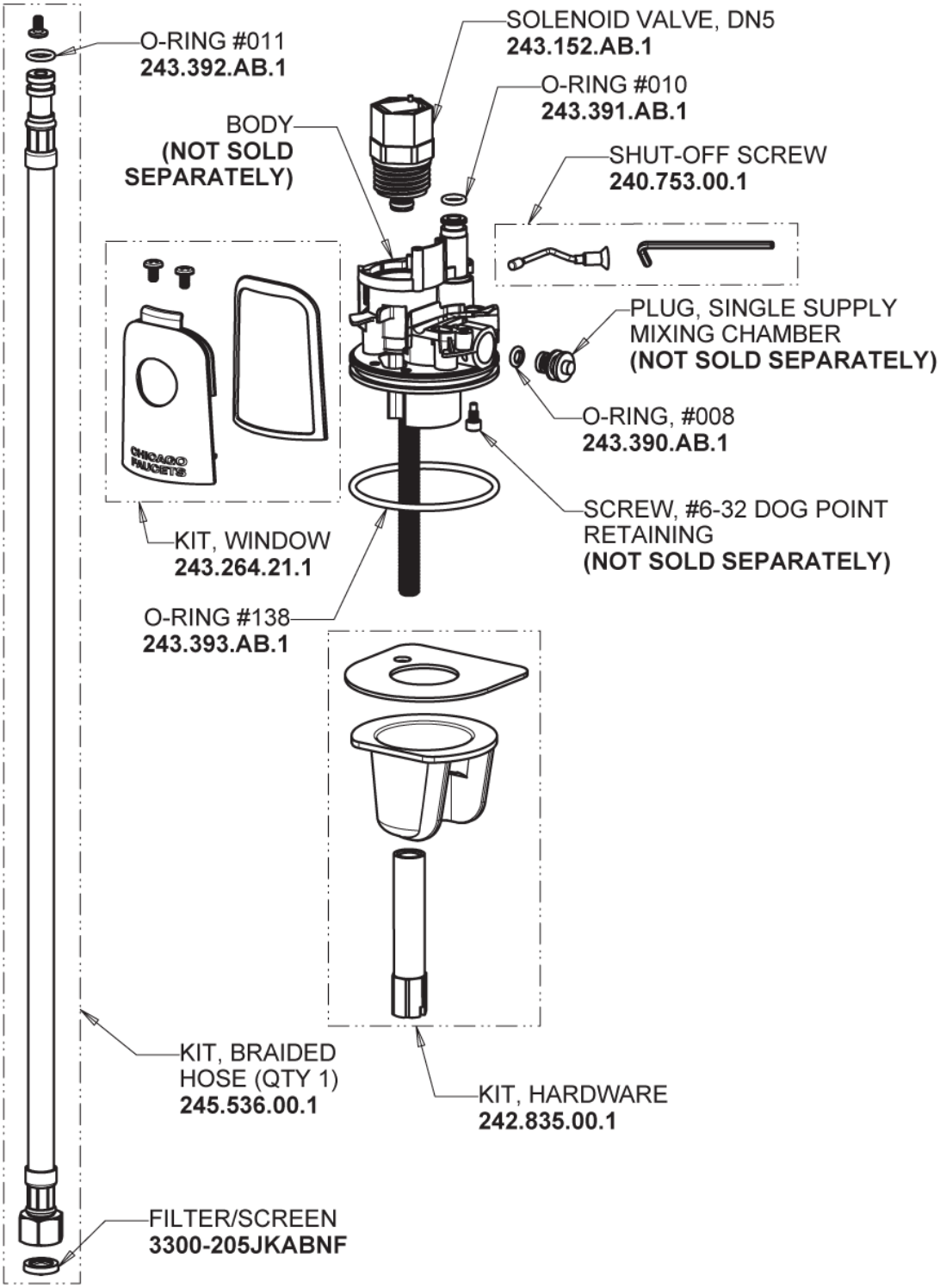

For Technical Assistance:

Phone: 800-TEC-TRUE (832-8783)

Email: techsupport.us@chicagofaucets.com

2100 South Clearwater Drive
Des Plaines, IL 60018
Phone: 847-803-5000
chicagofaucets.com

Repair Parts

116.673.AB.1

Touch-free, programmable faucet with above-deck electronics

HyTronic Edge Spout
242.754.AB.1

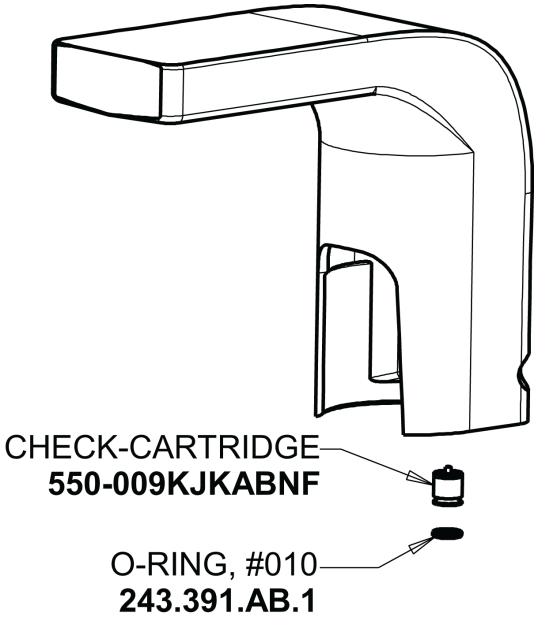

Electronic Module
242.433.00.1

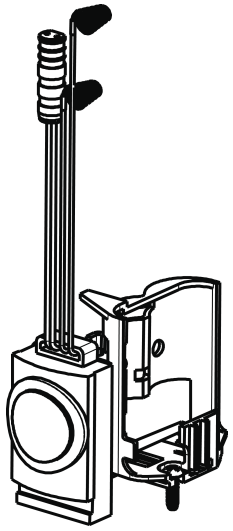

0.35 GPM (1.3 L/min) Vandal Proof
Econo-Flo Non-Aerating Outlet
E39VPJKABCP

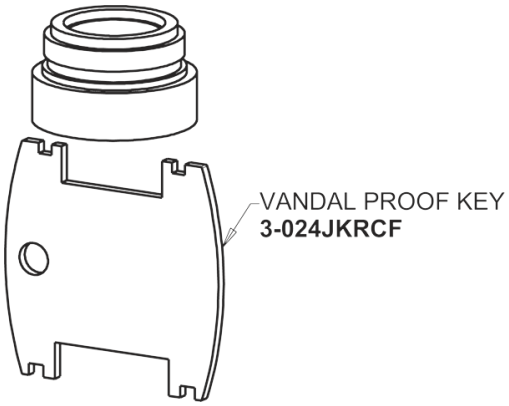

Emergency Backup Power System
243.290.00.1

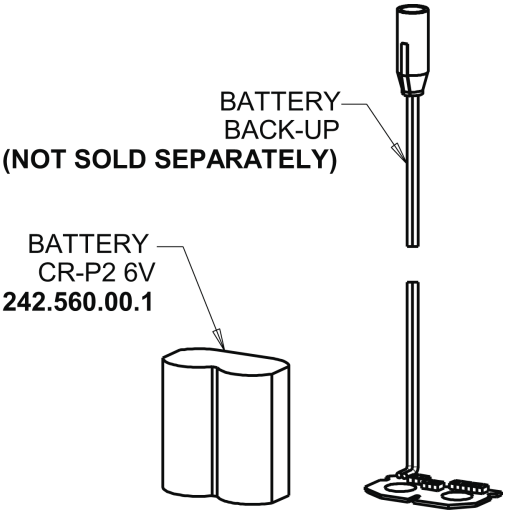

Bank Installation Adapter Wire
242.340.00.1

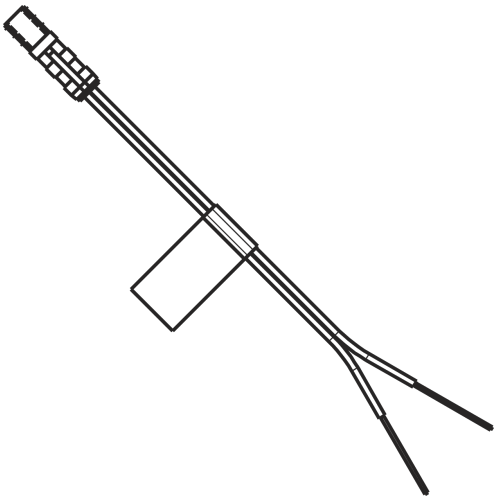

For Technical Assistance:

Phone: 800-TEC-TRUE (832-8783)
Email: techsupport.us@chicagofaucets.com

2100 South Clearwater Drive
Des Plaines, IL 60018
Phone: 847-803-5000
chicagofaucets.com