MECHANICAL FAUCETS

909-AGVCP

Ball Valves

Product Type

Panel Mounted Single Ball Valves Ball Valve

Features & Specifications

• Single Ball Valves
• Full Flow Nozzle
• 3/8" NPT Male Thread Inlet
• May Be Used with Most Laboratory Gases
• 909 Valve is Certified for Gas Service per ANSI Z21.15b-2006/CSA 9.1b-2006 by the Canadian Standards Association
• CFNow! Item Ships in 5 Days

Performance Specification

• Rated Operating Pressure: 0-0.5 PSI
• 0-0.5 PSI**

Compatibility by Service (Maximum Pressure):
- Acetylene (7.25 PSI)
- Ammonia (7.25 PSI)
- Argon (7.25 PSI)
- Butane (7.25 PSI)
- Carbon Dioxide (7.25 PSI)
- Carbon Monoxide (7.25 PSI)
- Helium (7.25 PSI)
- Hydrogen (7.25 PSI)
- Natural Gas (7.25 PSI)
- Methane (7.25 PSI)
- Nitrogen (7.25 PSI)
- Propane (7.25 PSI)
- Air (145 PSI)
- Compressed Air (145 PSI)
- Cold Water (150 PSI)

Warranty

• Lifetime Limited Faucet Warranty
• 5-Year Limited Cartridge Warranty
• 1-Year Limited Finish Warranty

Job Name _____

Item Number _____

Section/Tag _____

Model Specified _____

Architect _____

Engineer _____

Contractor _____

[ ] Submitted as Shown [ ] Submitted with Variations

Date _____

2100 South Clearwater Drive
Des Plaines, IL
P: 847/803-5000
F: 847/803-5454
Technical: 800/TEC-TRUE
www.chicagofaucets.com

909-AGVCP

Ball Valves

Architect/Engineer Specification

Chicago Faucets No. 909-AGVCP, Panel Mounted Single Ball Valves Ball Valve, Chrome Plated solid brass construction. Full Flow Laboratory Serrated Nozzle. 3/8" NPT Male Thread Inlet. May Be Used with Most Laboratory Gases. 909 Valve is Certified for Gas Service per ANSI Z21.15b-2006/CSA 9.1b-2006 by the Canadian Standards Association. .

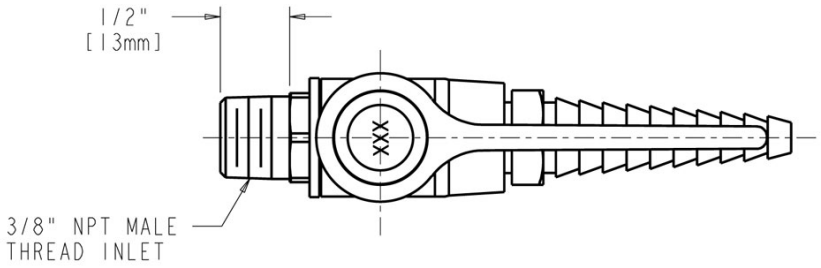

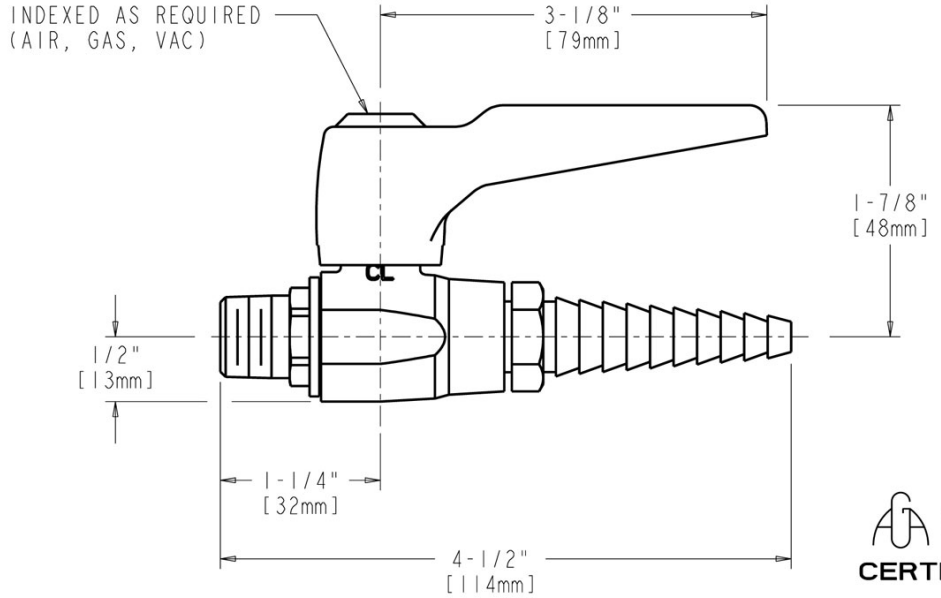

CERTIFIED

Operation and Maintenance

Installation should be in accordance with local plumbing codes. Flush all pipes thoroughly before installation. After installation, remove spout outlet or flow control and flush faucet thoroughly to clear any debris. Care should be taken when cleaning the product. Do not use abrasive cleaners, chemicals or solvents as they can result in surface damage. Use mild soap and warm water for cleaning and protecting the life of Chicago Faucet products. For specific operation and maintenance refer to the installation instructions and repair parts documents that are located at www.chicagofaucets.com.

Chicago Faucets, member of the Geberit Group, is the leading brand of commercial faucets and fittings in the United States, offering a complete range of products for schools, laboratories, hospitals, office buildings, food service, airports and sport facilities. Call 1.800.TECTRUE or 1.847.803.5000 Option 1 for installation or other technical assistance.

2100 South Clearwater Drive
Des Plaines, IL
P: 847/803-5000
F: 847/803-5454
Technical: 800/TEC-TRUE
www.chicagofaucets.com