MECHANICAL FAUCETS

802-VCP

Manual Faucets

Product Type

Deck Mounted 4" Fixed Centers Hot and Cold Water Sink Faucet

Features & Specifications

- 4" Fixed Centers
- 2.2 GPM (8.3 L/min) Vandal Proof Aerator
- 2-3/8" Vandal Proof Lever Handle
- Quaturn Compression Operating Cartridge
- 1/2" NPSM Supply Inlets and Coupling Nut for 3/8" or 1/2" Flexible Riser
- 4" Center to Center Integral Cast Brass Spout
- CFNow! Item Ships in 5 Days

Performance Specification

- Rated Operating Pressure: 20-125 PSI
- Rated Operating Temperature: 40-140ºF

Warranty

- Lifetime Limited Faucet Warranty
- 5-Year Limited Cartridge Warranty
- 1-Year Limited Finish Warranty

Codes & Standards

- ASME A112.18.1/CSA B125.1
- Certified to NSF/ANSI 61, Section 9 by CSA
- ADA ANSI/ICC A117.1

Job Name _____

Item Number _____

Section/Tag _____

Model Specified _____

Architect _____

Engineer _____

Contractor _____

[ ] Submitted as Shown [ ] Submitted with Variations

Date _____

2100 South Clearwater Drive
Des Plaines, IL
P: 847/803-5000
F: 847/803-5454
Technical: 800/TEC-TRUE
www.chicagofaucets.com

802-VCP

Manual Faucets

Architect/Engineer Specification

Chicago Faucets No. 802-VCP, Deck Mounted 4" Fixed Centers Hot and Cold Water Sink Faucet, Chrome Plated solid brass construction. 4" Center to Center Integral Cast Brass Spout. 2.2 GPM (8.3 L/min) Pressure Compensating Softflo Vandal Proof Aerator. 2-3/8" Metal Vandal Proof Lever handle(s) with Eight Point Tapered Broach and Blue and Red Buttons. Quaturn™ rebuildable compression cartridge, opens and closes 90°, closes with water pressure, features square tapered stem. 1/2" NPSM Supply Inlets and Coupling Nut for 3/8" or 1/2" Flexible Riser. Secondary Control Valve: 4" Center to Center Integral Cast Brass Spout. This product meets ADA ANSI/ICC A117.1 requirements and is tested and certified to industry standards: ASME A112.18.1/CSA B125.1, and Certified to NSF/ANSI 61, Section 9 by CSA.

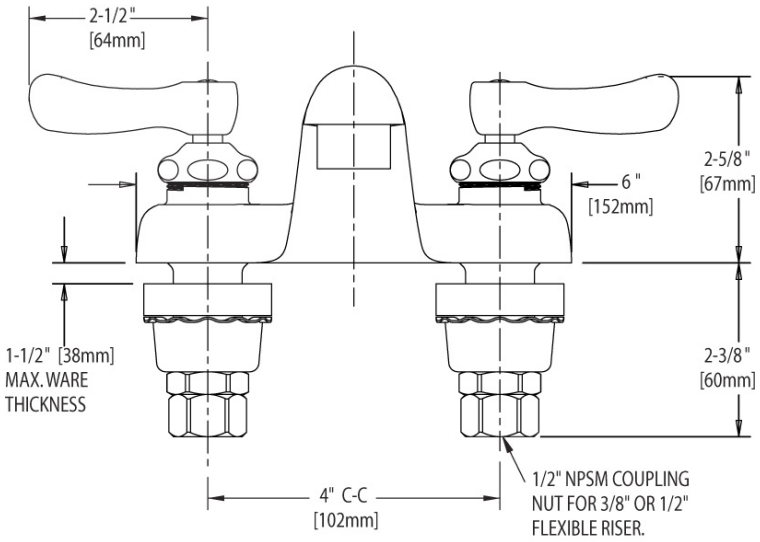

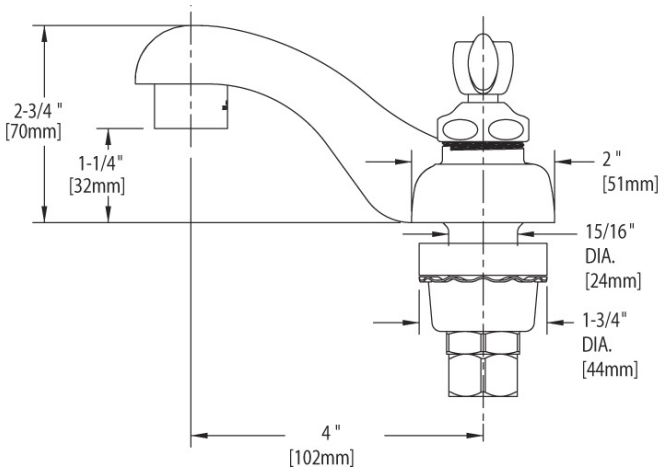

Operation and Maintenance

Installation should be in accordance with local plumbing codes. Flush all pipes thoroughly before installation. After installation, remove spout outlet or flow control and flush faucet thoroughly to clear any debris. Care should be taken when cleaning the product. Do not use abrasive cleaners, chemicals or solvents as they can result in surface damage. Use mild soap and warm water for cleaning and protecting the life of Chicago Faucet products. For specific operation and maintenance refer to the installation instructions and repair parts documents that are located at www.chicagofaucets.com.

Chicago Faucets, member of the Geberit Group, is the leading brand of commercial faucets and fittings in the United States, offering a complete range of products for schools, laboratories, hospitals, office buildings, food service, airports and sport facilities. Call 1.800.TECTRUE or 1.847.803.5000 Option 1 for installation or other technical assistance.

2100 South Clearwater Drive
Des Plaines, IL
P: 847/803-5000
F: 847/803-5454
Technical: 800/TEC-TRUE
www.chicagofaucets.com