MECHANICAL FAUCETS

445-L9CP

Manual Faucets

Product Type

Wall Mounted 3-3/8" Body, Adjustable Arms 3" - 8-3/8" Hot and Cold Water Sink Faucet

Features & Specifications

- 3-3/8" Body, Adjustable Arms 3" - 8-3/8"
- 9-1/2" L Type Swing Spout
- 2.2 GPM (8.3 L/min) Aerator
- 2-3/8" Vandal Proof Lever Handle
- Quaturn Compression Operating Cartridge
- 2-1/2" Offset Inlet Supply Arm with 1/2" NPT Female Thread Inlet
- 2 5/16" Diameter Slip Flange

Performance Specification

- Rated Operating Pressure: 20-125 PSI
- Rated Operating Temperature: 40-140ºF

Warranty

- Lifetime Limited Faucet Warranty
- 5-Year Limited Cartridge Warranty
- 1-Year Limited Finish Warranty

Codes & Standards

- ASME A112.18.1/CSA B125.1
- Certified to NSF/ANSI 61, Section 9 by CSA
- ADA ANSI/ICC A117.1

Job Name _____

Item Number _____

Section/Tag _____

Model Specified _____

Architect _____

Engineer _____

Contractor _____

[ ] Submitted as Shown [ ] Submitted with Variations

Date _____

2100 South Clearwater Drive
Des Plaines, IL
P: 847/803-5000
F: 847/803-5454
Technical: 800/TEC-TRUE
www.chicagofaucets.com

445-L9CP

Manual Faucets

Architect/Engineer Specification

Chicago Faucets No. 445-L9CP, Wall Mounted 3-3/8" Body, Adjustable Arms 3" - 8-3/8" Hot and Cold Water Sink Faucet, Chrome Plated solid brass construction. 9-1/2" Center to Center L Type Swing Spout. 2.2 GPM (8.3 L/min) Pressure Compensating Softflo Aerator. 2-3/8" Metal Vandal Proof Lever handle(s) with Sixteen Point Tapered Broach and Secured Blue and Red Buttons. Quaturnï¿½ rebuildable compression cartridge, opens and closes 90ï¿½, closes with water pressure, features square tapered stem. 2-1/2" Offset Inlet Supply Arm with 1/2" NPT Female Thread Inlet. 2 5/16" Diameter Slip Flange. This product meets ADA ANSI/ICC A117.1 requirements and is tested and certified to industry standards: ASME A112.18.1/CSA B125.1, and Certified to NSF/ANSI 61, Section 9 by CSA.

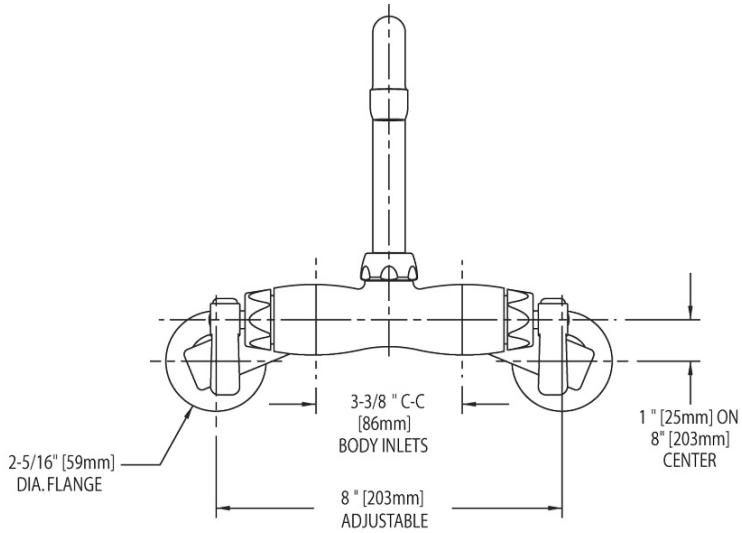

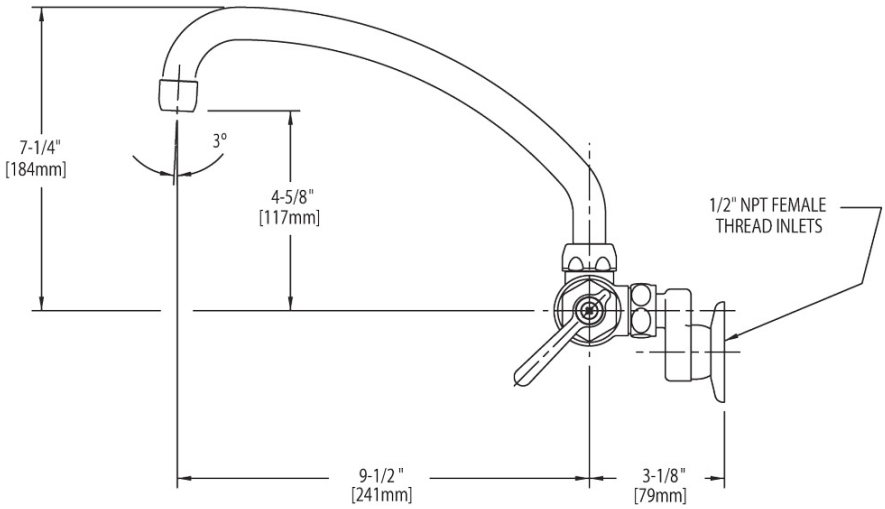

Operation and Maintenance

Installation should be in accordance with local plumbing codes. Flush all pipes thoroughly before installation. After installation, remove spout outlet or flow control and flush faucet thoroughly to clear any debris. Care should be taken when cleaning the product. Do not use abrasive cleaners, chemicals or solvents as they can result in surface damage. Use mild soap and warm water for cleaning and protecting the life of Chicago Faucet products. For specific operation and maintenance refer to the installation instructions and repair parts documents that are located at www.chicagofaucets.com.

Chicago Faucets, member of the Geberit Group, is the leading brand of commercial faucets and fittings in the United States, offering a complete range of products for schools, laboratories, hospitals, office buildings, food service, airports and sport facilities. Call 1.800.TECTRUE or 1.847.803.5000 Option 1 for installation or other technical assistance.

2100 South Clearwater Drive
Des Plaines, IL
P: 847/803-5000
F: 847/803-5454
Technical: 800/TEC-TRUE
www.chicagofaucets.com